Symbol

HPC:Parallel type HYC:Fulcrum type

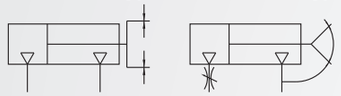

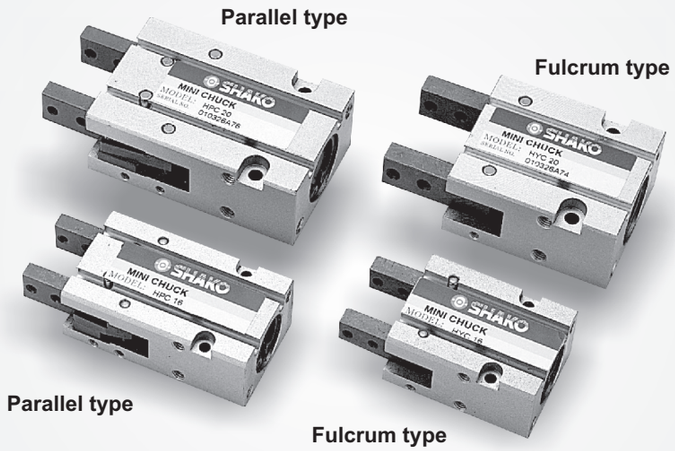

Features

- ∗ The gripper open and close are controlled by pneumatic system.
- ∗ Miniature design, space saving.
- ∗ Sensor installation is available.

How to order

HYC	32	SR	1
Mini chuck	Bore size	Sensor type	Number of sensor
HPC Parallel type	10 ϕ10	Blank W/O sensor	1 pc
HYC Fulcrum type	16 ϕ16	SR Round type	2 pcs
	20 ϕ20		
	25 ϕ25		
	32 ϕ32		

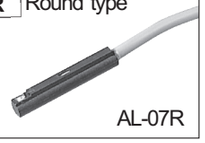

Specifications

Bore size	ϕ10	ϕ16	ϕ20	ϕ25	ϕ32
Port size	M 3	M 5			
Gripping gap distance (For HPC)	4mm	8mm	12mm	14mm	16mm
Gripping force (For HPC)	5N	17.6N	34.3N	58.8N	83.3N
Operating angle (For HYC)	-10° ～ +30°				
Fluid	Compressed air				
Acting	Double acting				
Operating pressure range	1.5 ~ 7 kgf/cm²				
Max. operating pressure	10.5 kgf/cm²				
Lubrication	Not required or few				
Body material	Aluminum alloy				
Magnet	Built-in				
Ambient temperature	0℃～60℃				
Operating frequency	50 ~ 700 mm/Sec.				

Theoretical force

Bore size	Piston area cm²	Operating pressure kgf/cm²					
		2	3	4	5	6	7
ϕ10	0.79	1.58	2.37	3.16	3.95	4.74	5.53
ϕ16	2.01	4.02	6.03	8.04	10.5	12.06	14.07
ϕ20	3.14	6.28	9.42	12.56	157	18.84	21.98
ϕ25	4.91	9.82	14.73	19.64	24.55	29.46	34.37
ϕ32	8.04	16.08	24.12	32.16	40.2	48.24	56.28

Mounting example

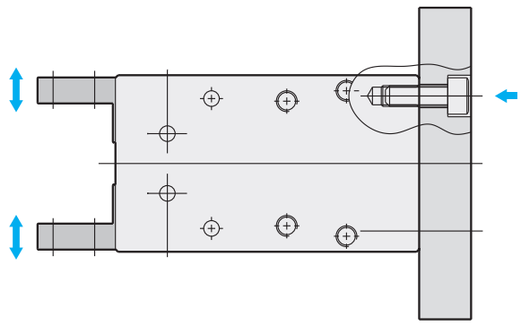

Bottom mounting

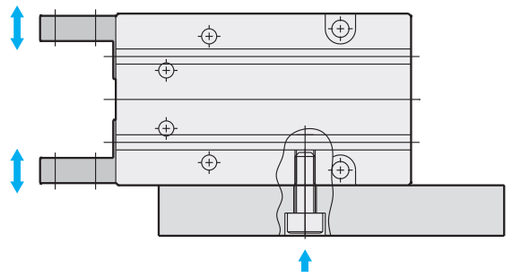

Side mounting

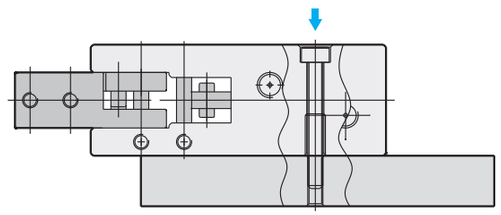

Top face mounting

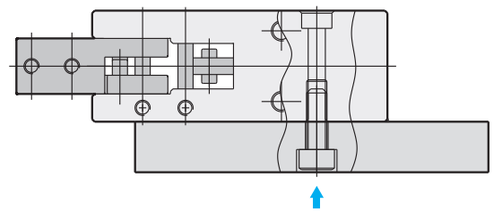

Bottom face mounting

AIR CYLINDERS

Material of parts

HPC : Parallel type

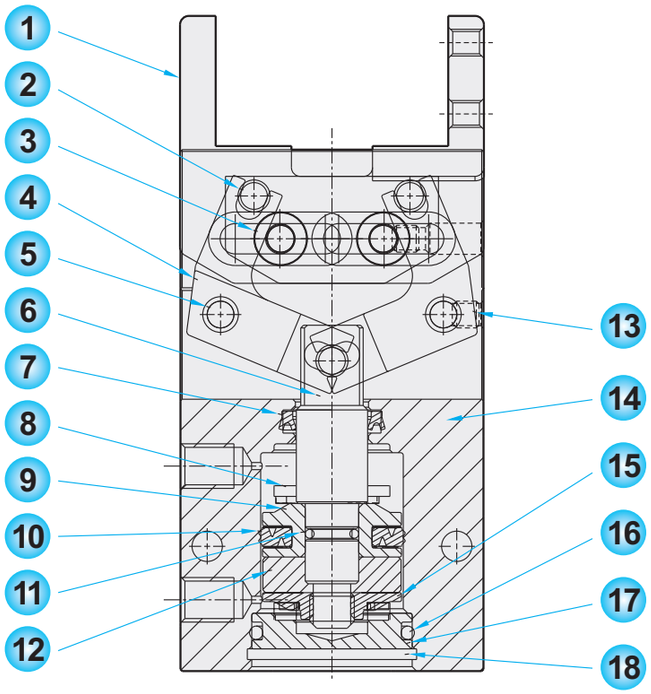

No.	Description	Material	Qty
1	Gripper	Stainless steel	2
2	Pin	Carbon steel	3
3	Roller	Carbon steel	4
4	Lever	Stainless steel	2
5	Lever shaft	Carbon steel	4
6	Piston rod	S45C+Cr	1
7	U-ring	NBR	1
8	Gasket	NBR	2
9	Piston	Aluminum alloy	1
10	U-piston seal	NBR	1
11	O-ring	NBR	1
12	Magnet	Ferrite magnet	1
13	Plug	Carbon steel	4
14	Body	Aluminum alloy	1
15	Magnet holder	Aluminum alloy	1
16	O-ring	NBR	1
17	End cover	Aluminum alloy	1
18	C type snap ring	Fe+Ni	1

HYC : Fulcrum type

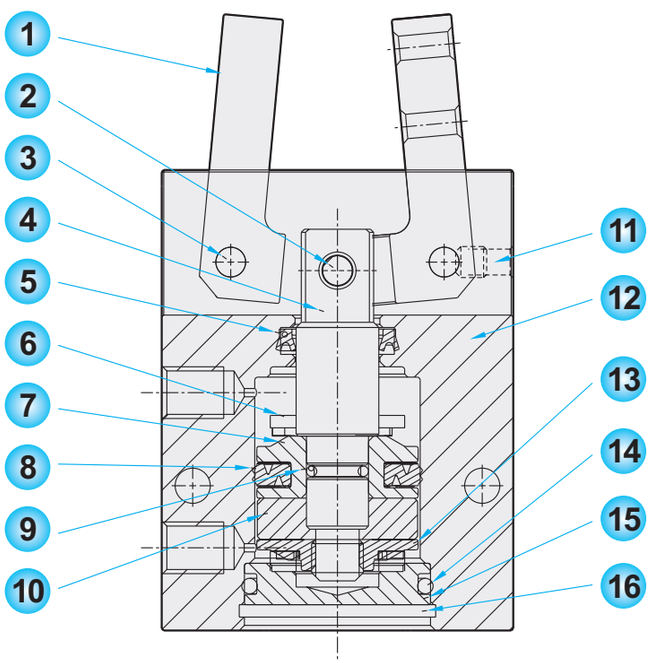

No.	Description	Material	Qty
1	Gripper	Stainless steel	2
2	Pin	Carbon steel	1
3	Lever shaft	Carbon steel	2
4	Piston rod	S45C+Cr	1
5	U-ring	NBR	1
6	Gasket	NBR	2
7	Piston	Aluminum alloy	1
8	U-piston ring	NBR	1
9	O-ring	NBR	1
10	Magnet	Ferrite magnet	1
11	Plug	Carbon steel	2
12	Body	Aluminum alloy	1
13	Magnet holder	Aluminum alloy	1
14	O-ring	NBR	1
15	End cover	Aluminum alloy	1
16	C type snap ring	Fe+Ni	1

Dimensions

HPC-10

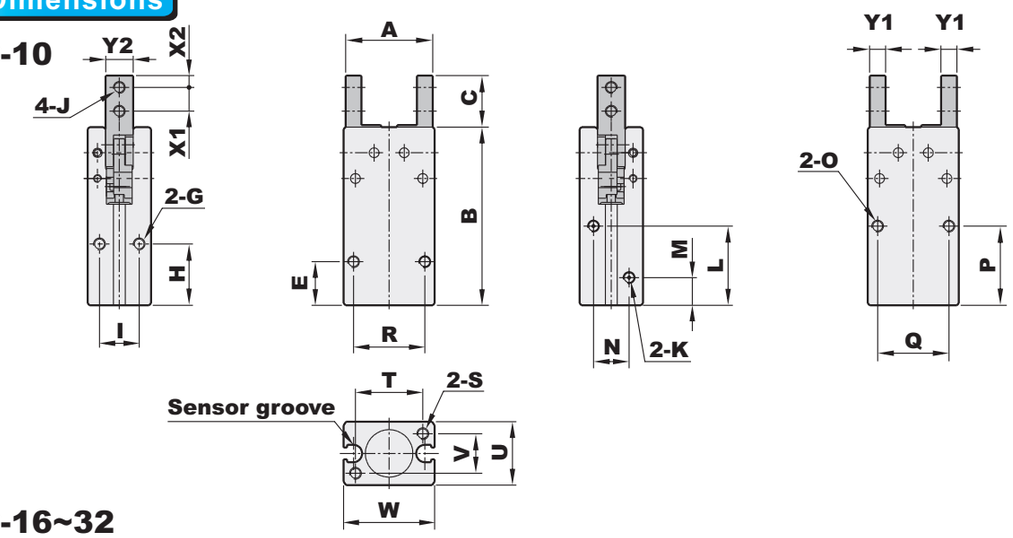

HPC-16~32

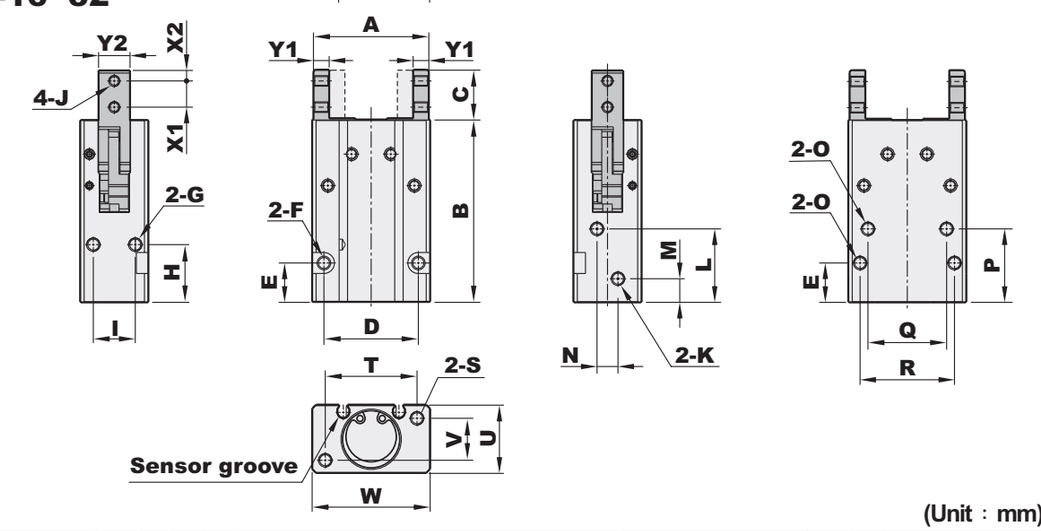

(Unit : mm)

Model	A Open	A Closed	B	C	D	E	F	G	H	I	J
HPC-10	22	18	45	13	18	11	M3xP0.5xL8.0	M3xP0.5xDepth5.0	15.5	10	M3xP0.5 through
HPC-16	33	25	58.5	15	28	14	ϕ 3.4 through, ϕ 6 Counter bore x Depth3.5	M4xP0.7xDepth8.0	21	14	M3xP0.5 through
HPC-20	44	32	69.5	19	36	15	ϕ 4.3 through, ϕ 8 Counter bore x Depth4.5	M5xP0.8xDepth10.0	22	16	M4xP0.7 through
HPC-25	51	37	79.5	24	40	16	ϕ 5.3 through, ϕ 9.5 Counter bore x Depth5.5	M6xP1.0xDepth12.0	24.5	20	M5xP0.8 through
HPC-32	60	44	88	31	50	18	ϕ 5.3 through, ϕ 9.5 Counter bore x Depth5.5	M6xP1.0xDepth15.0	30	26	M6xP1.0 through

Model	K	L	M	N	O	P	Q	R	S	T	U	V	W	X1	X2	Y1	Y2
HPC-10	M3xP0.5	20	7	9	M3xP0.5xL8.0	20	18	—	M3xP0.5xL5.0	17	16	10	23	6	3	4	7
HPC-16	M5xP0.8	23	8	6	M4xP0.7xL8.0	25.5	24	28	M4xP0.7xL7.0	26	22	14	34	8	3	5	11
HPC-20	M5xP0.8	28	9	8	M5xP0.8xL10.0	28	30	36	M5xP0.8xL10.0	35	26	16	45	10	4	6	12
HPC-25	M5xP0.8	30.5	9.5	18	M6xP1.0xL12.0	31.5	36	40	M6xP1.0xL10.0	40	32	20	52	12	5	8	14
HPC-32	M5xP0.8	34	10	24	M6xP1.0xL15.0	37.5	44	50	M6xP1.0xL10.0	46	40	26	60	15	7	9	18

Dimensions

HYC-10

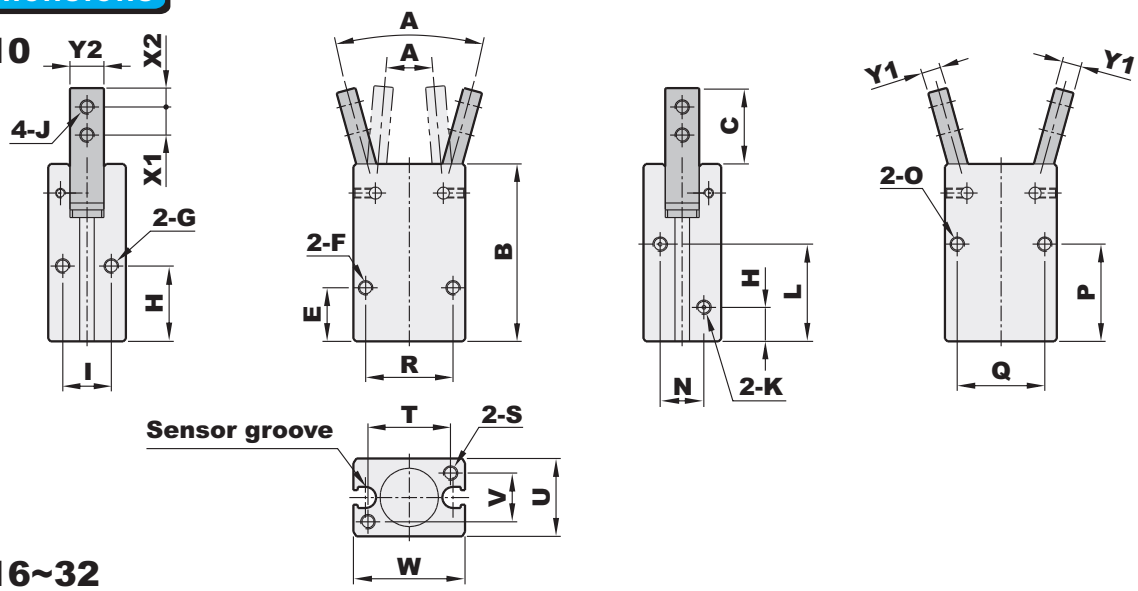

HYC-16~32

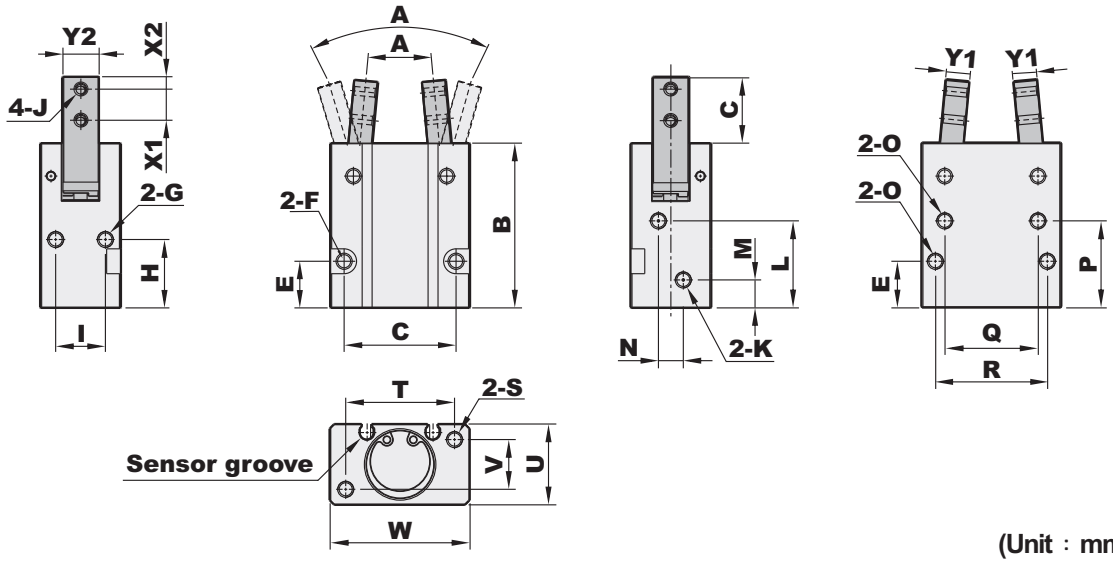

(Unit : mm)

Model	A		B	C	D	E	F	G	H	I	J
	Open	Closed									
HYC-10	30°	-10°	36.5	15.7	18	11	M3xP0.5xL8.0	M3xP0.5xL5.0	15.5	10	M3xP0.5 through
HYC-16	30°	-10°	45.5	17.5	28	14	ϕ3.4 through, ϕ6 Counter bore x L3.5	M4xP0.7xL8.0	21	14	M3xP0.5 through
HYC-20	30°	-10°	53	22	36	15	ϕ4.3 through, ϕ8 Counter bore x L4.5	M5xP0.8xL10.0	22	16	M4xP0.7 through
HYC-25	30°	-10°	61	26	40	16	ϕ5.3 through, ϕ9.5 Counter bore x L5.5	M6xP1.0xL12.0	24.5	20	M5xP0.8 through
HYC-32	30°	-10°	68	30	50	18	ϕ5.3 through, ϕ9.5 Counter bore x L5.5	M6xP1.0xL15.0	30	26	M6xP1.0 through

Model	K	L	M	N	O	P	Q	R	S	T	U	V	W	X1	X2	Y1	Y2
HYC-10	M3xP0.5	20	7	9	M3xP0.5xL8.0	20	18	—	M3xP0.5xL8.0	17	16	10	23	6	3	4	7
HYC-16	M5xP0.8	23	8	6	M4xP0.7xL8.0	25.5	24	28	M4xP0.7xL8.0	26	22	14	34	8	3	6	9
HYC-20	M5xP0.8	28	9	8	M5xP0.8xL10.0	28	30	36	M5xP0.8xL10.0	35	26	16	45	10	4	7	12
HYC-25	M5xP0.8	30.5	9.5	18	M6xP1.0xL12.0	31.5	36	40	M6xP1.0xL10.0	40	32	20	52	12	5	9	14
HYC-32	M5xP0.8	34	10	24	M6xP1.0xL15.0	37.5	44	50	M6xP1.0xL10.0	46	40	26	60	14	6	10	18